Multi-Phase Current Mode Step-Up SEPIC Controller

Isabella Murillo, Dylan Thornburg, Akira Zone

2026

Winter Quarter

Non-inverting Buck Boost formula:

$$\frac{V_{out}}{V_{in}} = \frac{D}{1-D}$$

Simplified Single-Phase Circuit Topology

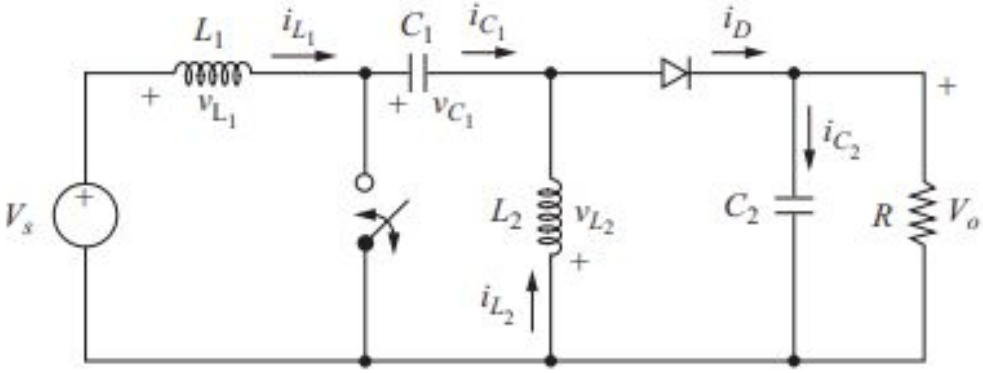

(a)

How it works

Simplified Polyphase Circuit Topology -Switch ON

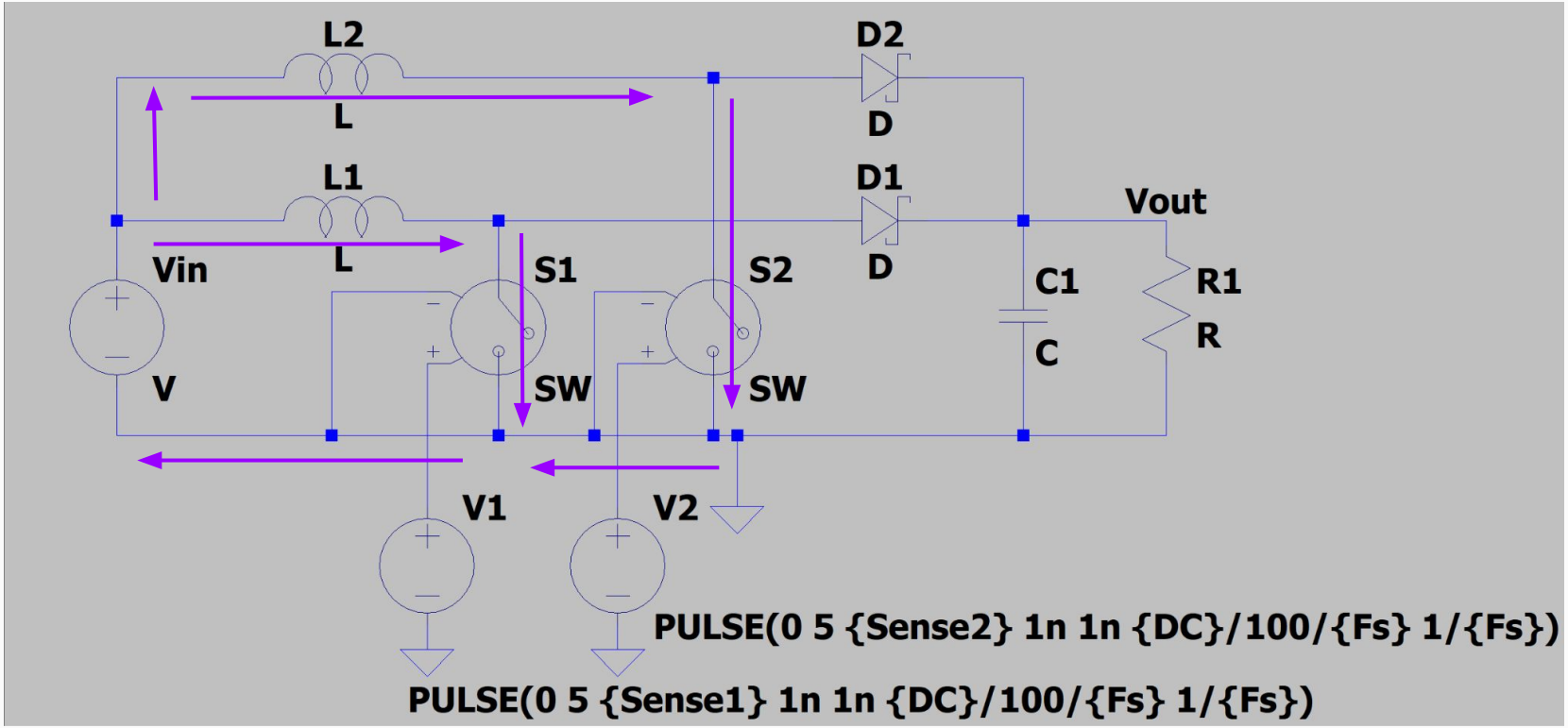

How it works

Simplified Polyphase Circuit Topology -Switch OFF

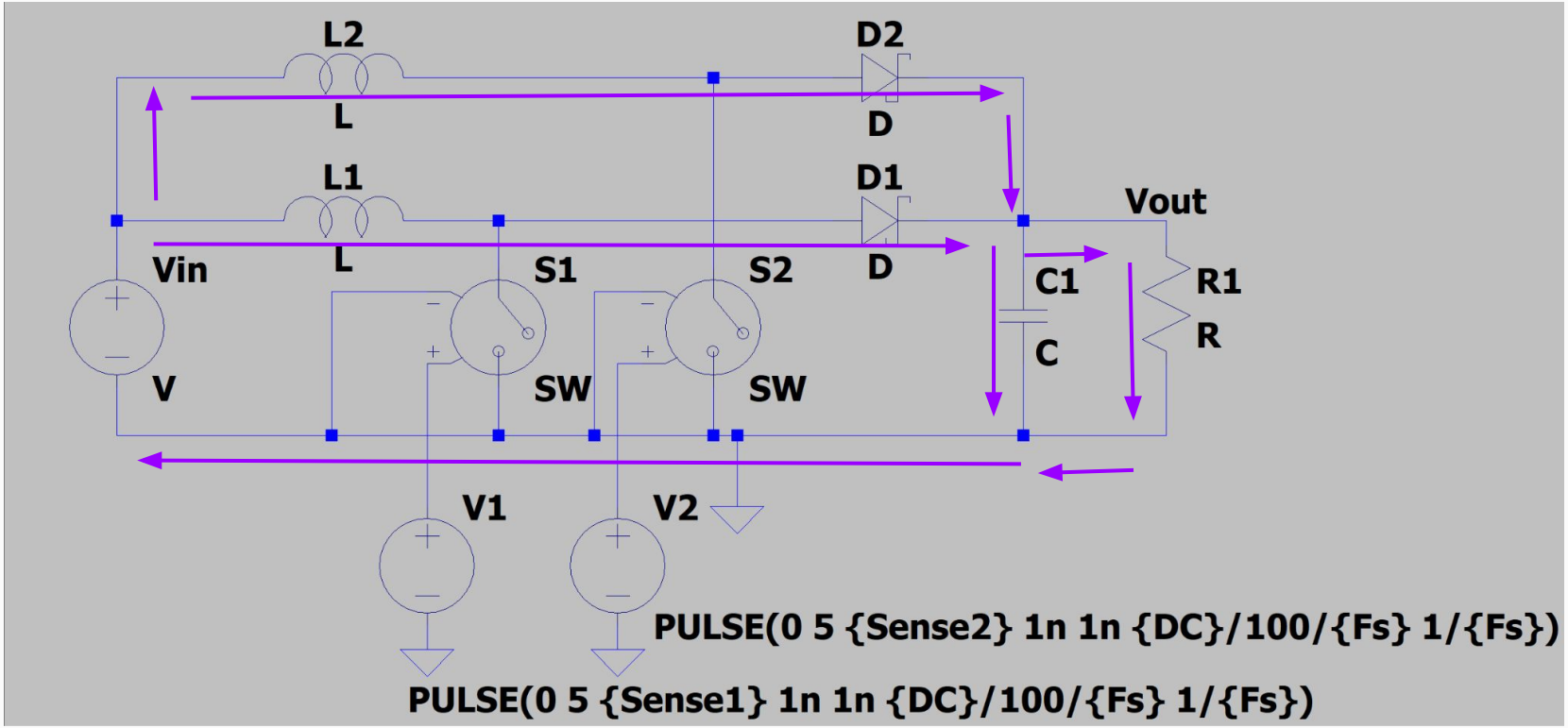

Unique features and Characteristics

- Buck-Boost behavior without inverting.
- Two-phase (interleaved) constant-frequency, peak current-mode control.
  - High efficiency
  - Component stress is more shared
- Programmable limits/knobs commonly used in design validation:
  - Adjustable Max duty-cycle limit (Dmax)
  - Soft-start (SS) pin for controlled startup by ramping allowed peak current.
  - Programmable switching frequency via a resistor (Freq)
- Peak Current-Mode Control for fast transient response
- SEPTIC Converter Topology
- Soft STart Feature

LTSpice Schematic – LTC3862-2_DC1891.asc

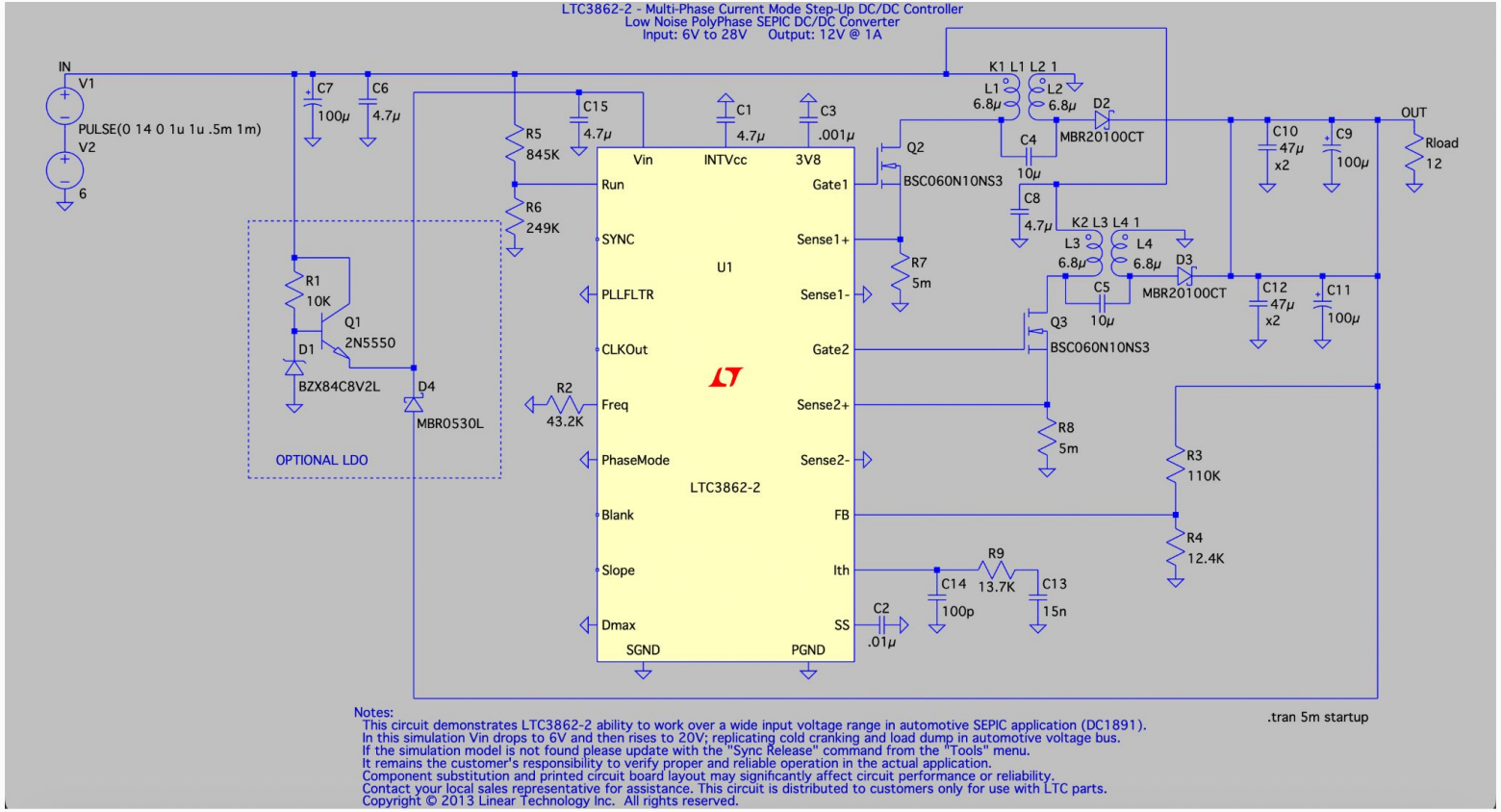

What are the components that make the converter work?

- Buck (step-down) converter
- For the converter to work:

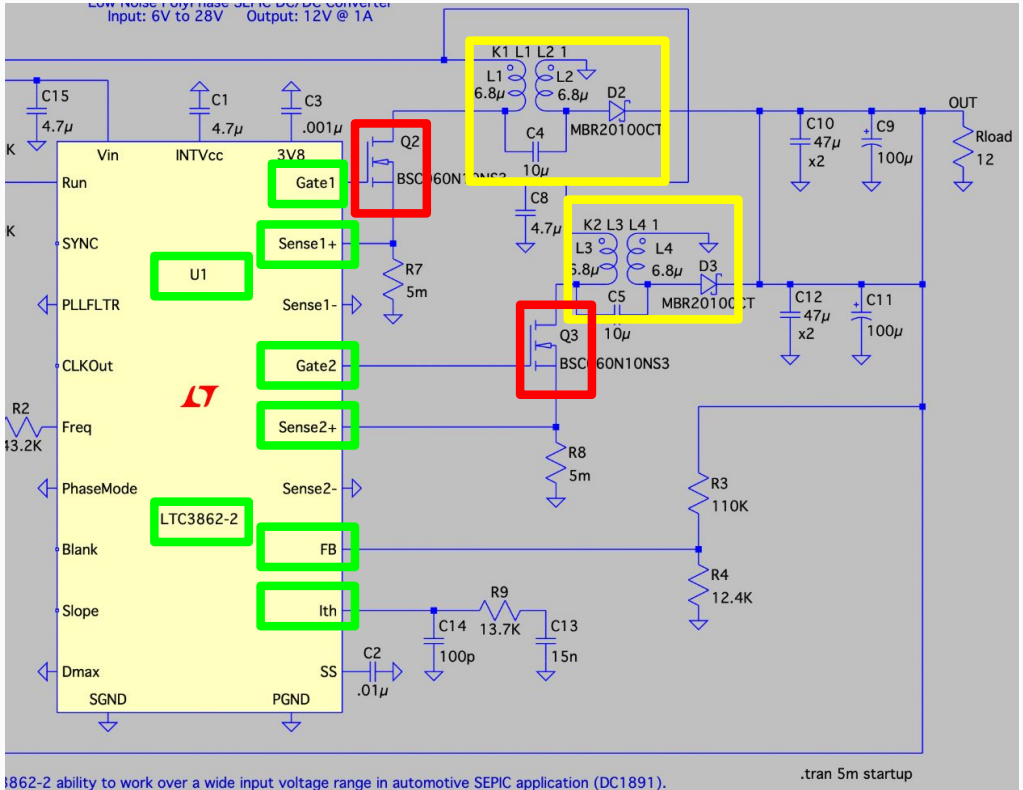

Input Voltage, Output Voltage Relationship

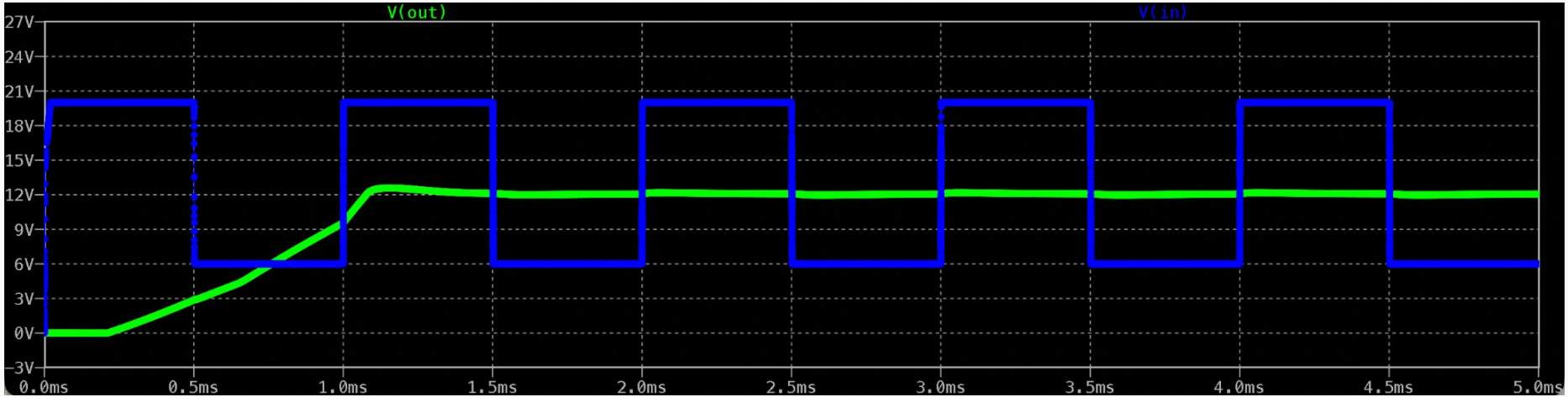

Input Voltage, Output Voltage Relationship

6V DC Input:

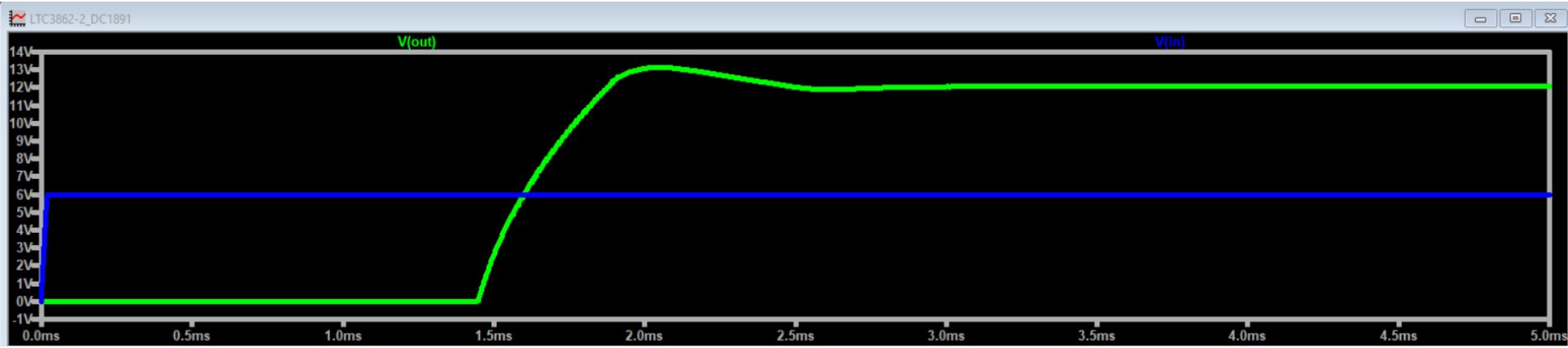

24V DC Input:

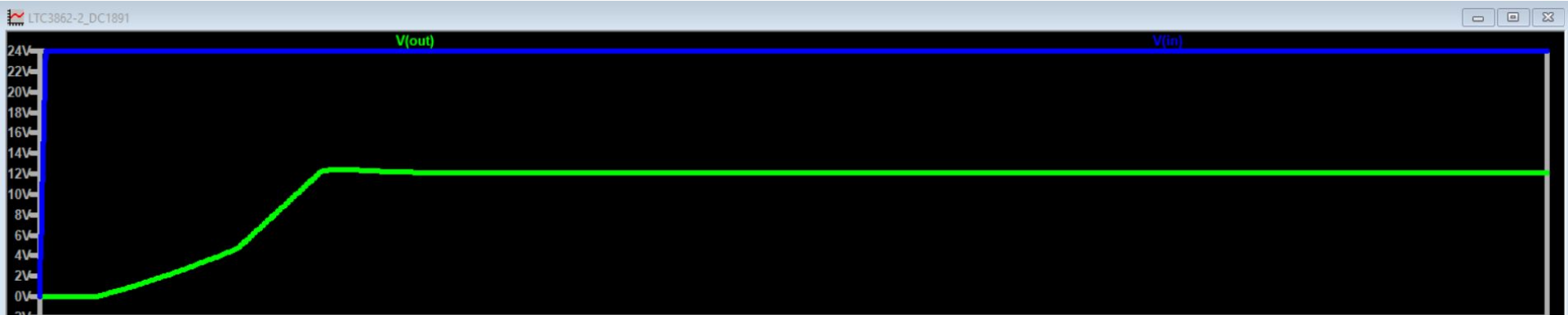

Input Voltage, Output Voltage Relationship

Changing DC Voltage

DC Offset 6V (default)

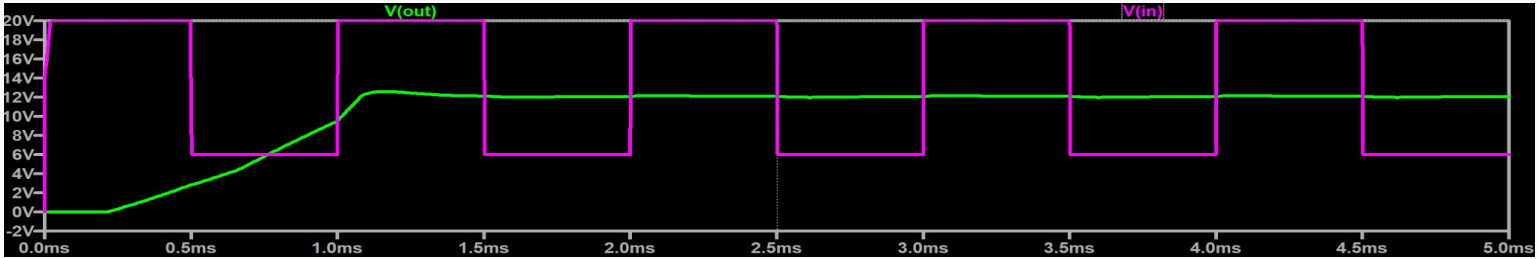

DC Offset 0V

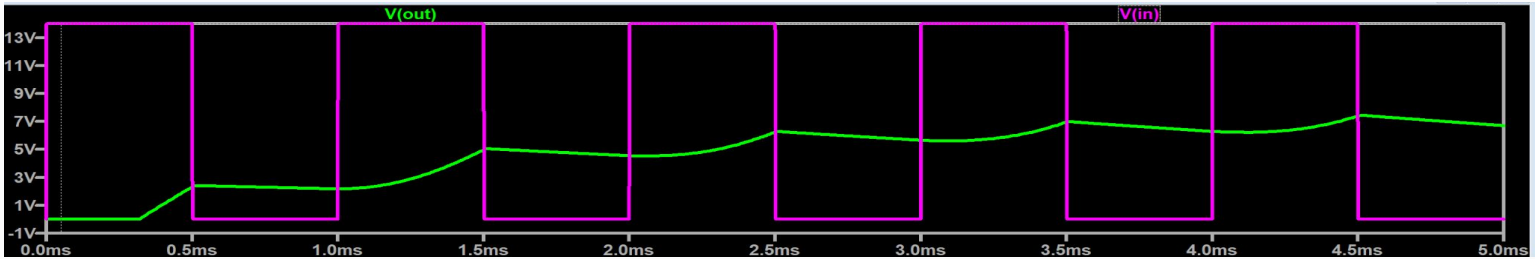

DC Offset 12V

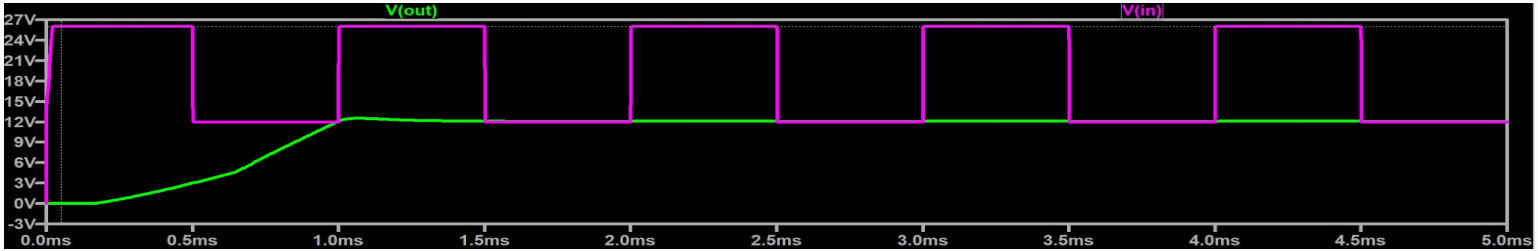

Changing V2

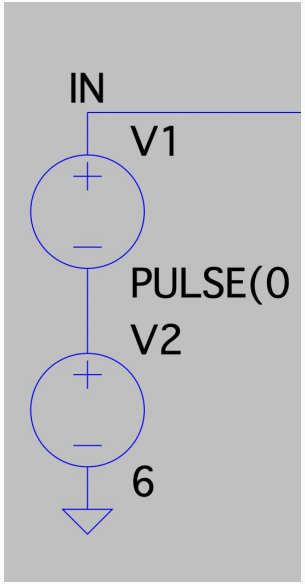

Soft Start

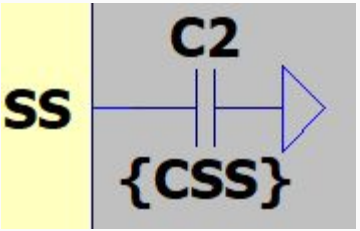


```
.step param CSS 0.01u 0.45u 0.15u
```

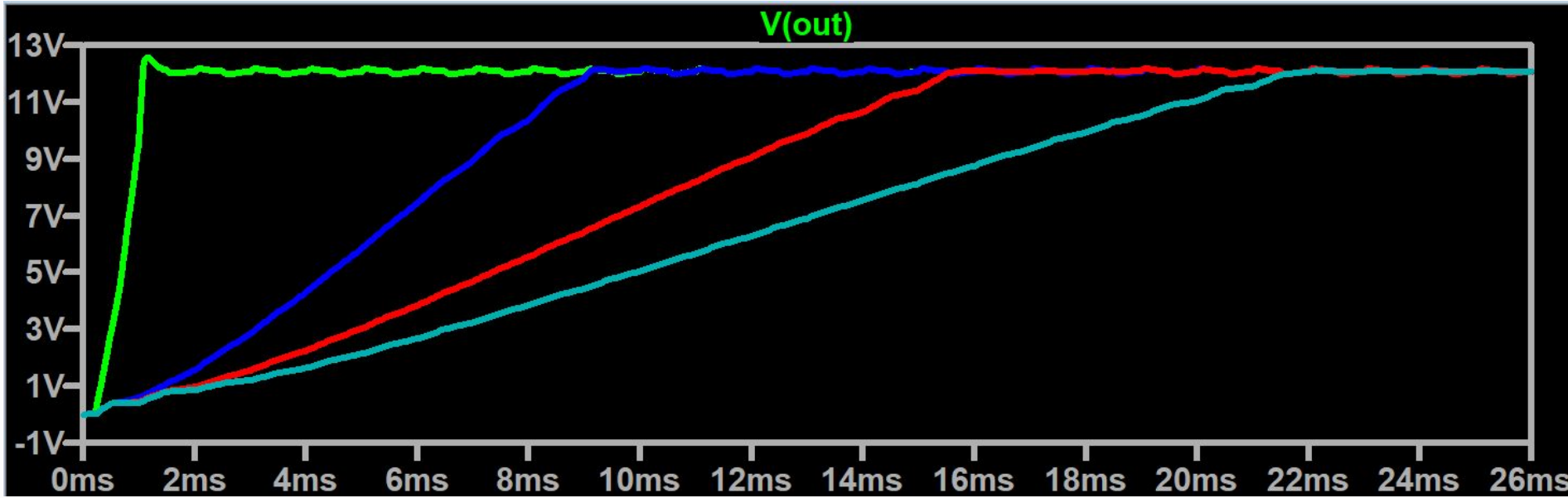

Phase Behavior

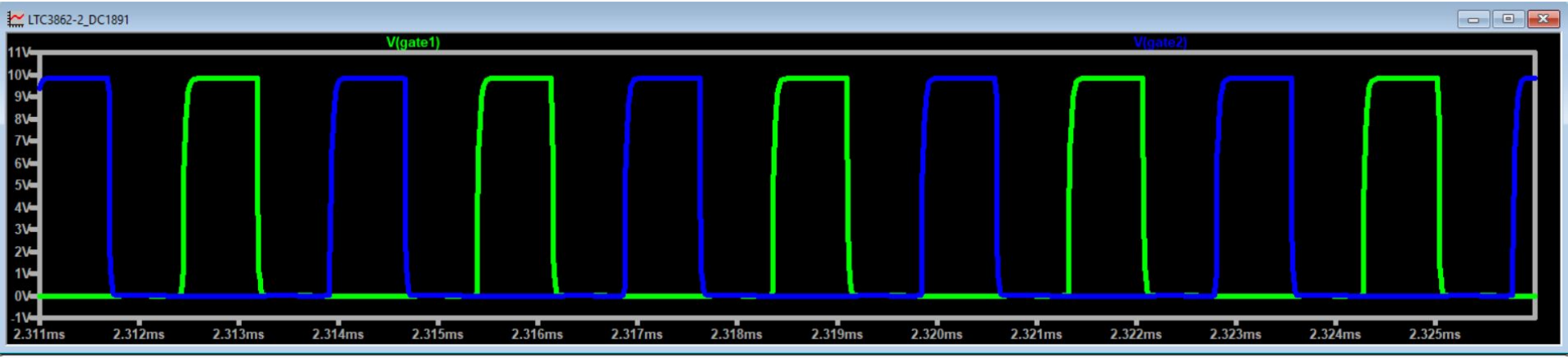

Differing phases at the gate drives demonstrate interleaved operation (polyphase behavior).

Feedback Path

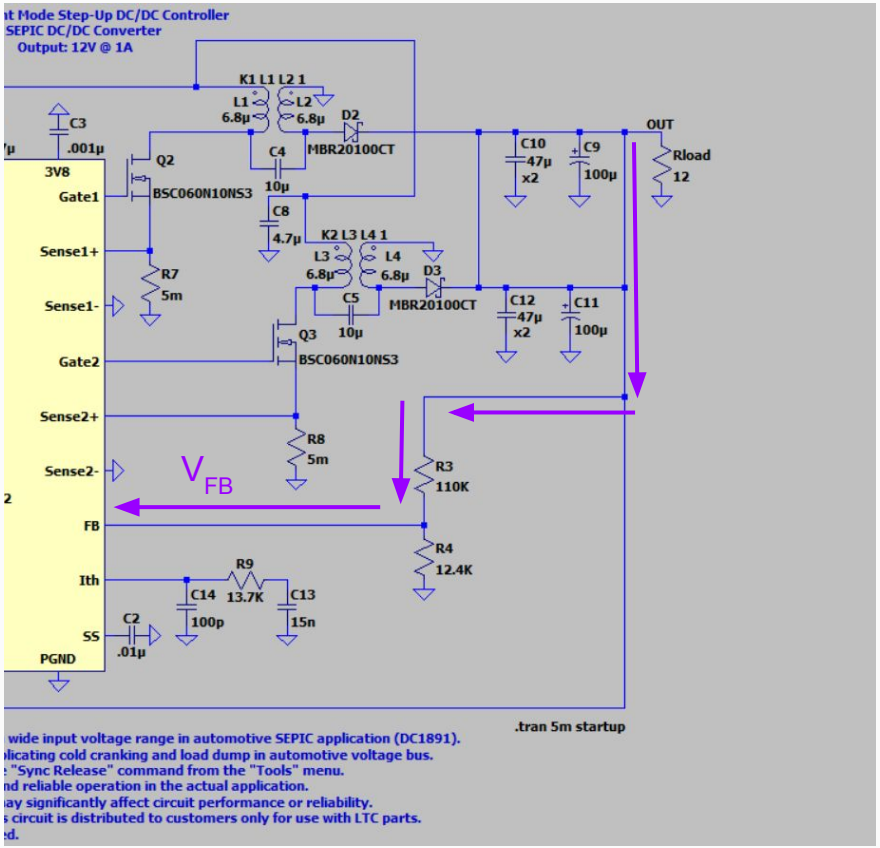

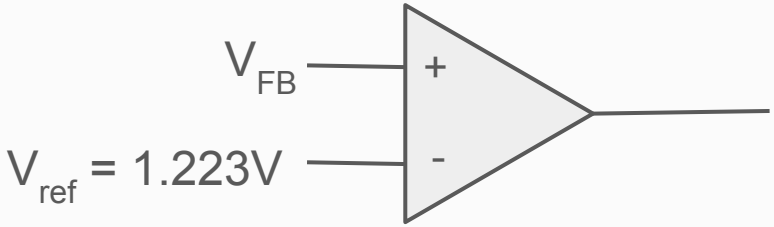

Feedback loop works as a voltage divider to an op-amp:

- Increasing R4 increases V_{out}
- Decreasing R4 decreases V_{out}
- No current (in μA) through feedback path

$$V_{out} = V_{ref}\left(1 + \frac{R_3}{R_4}\right)$$

$$12.17V = 1.233\left(1 + \frac{110k}{12.4k}\right)$$

Simulated Output Voltage Ripple

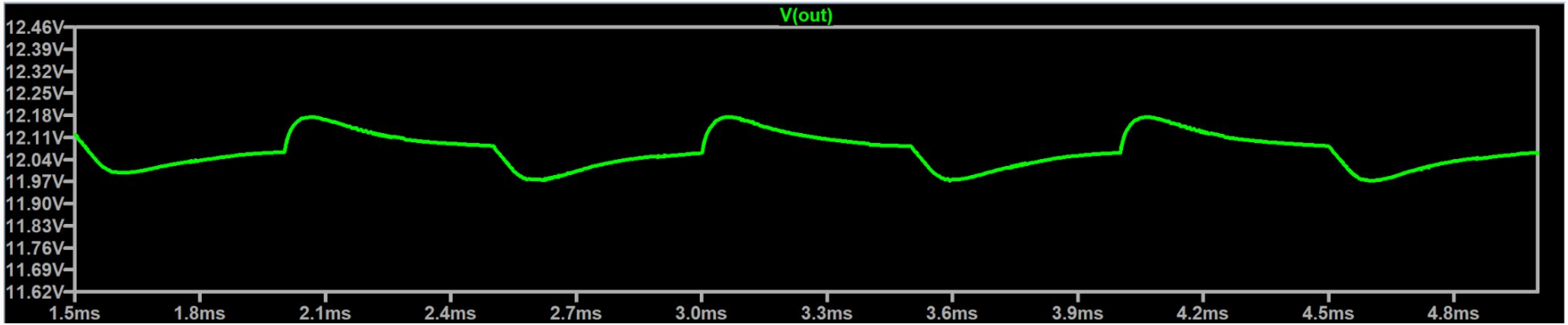

Simulated Output Current Ripple

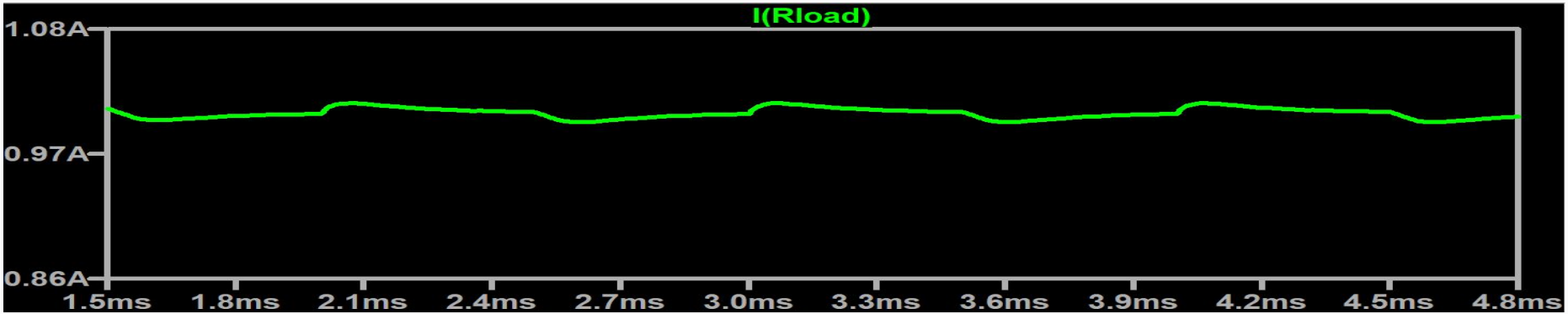

Measured Output Voltage Ripple

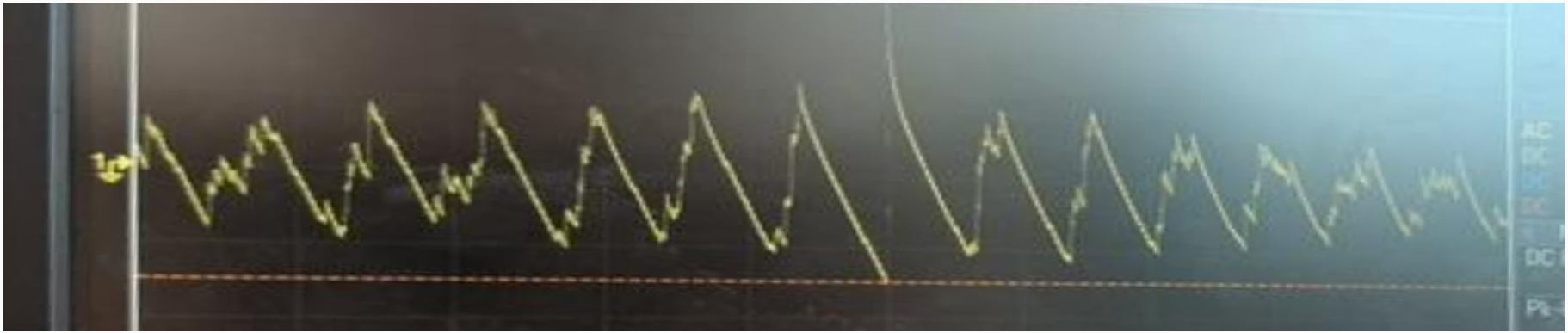

Changing both Sense 1+ and Sense 2+

Transient Response

```
.step param RS2 1m 10m 1.5m
```

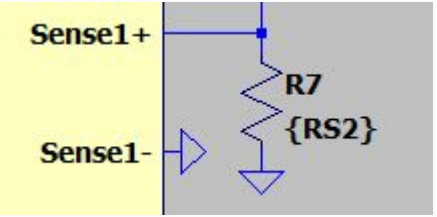

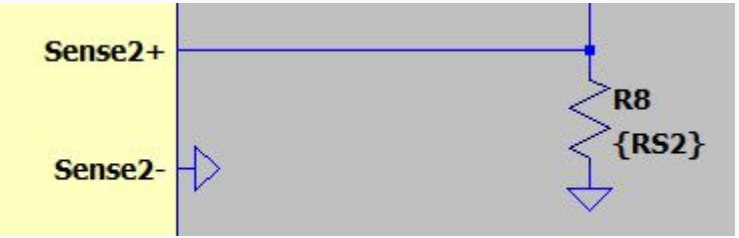

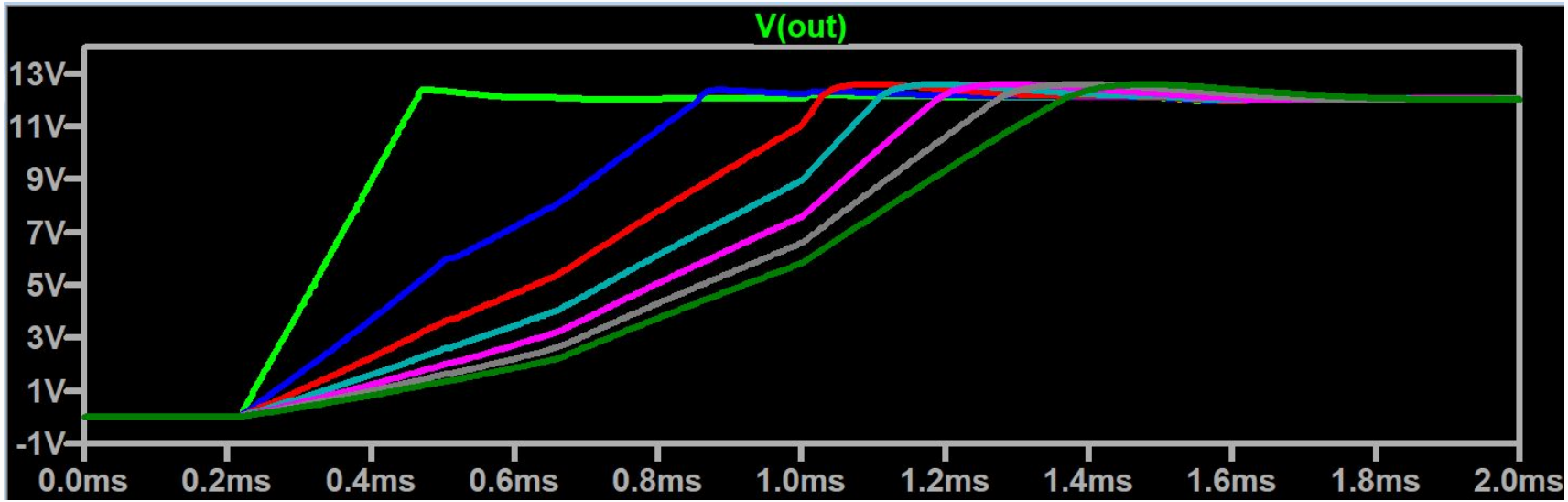

Changing both Sense 1+ and Sense 2+

Steady State

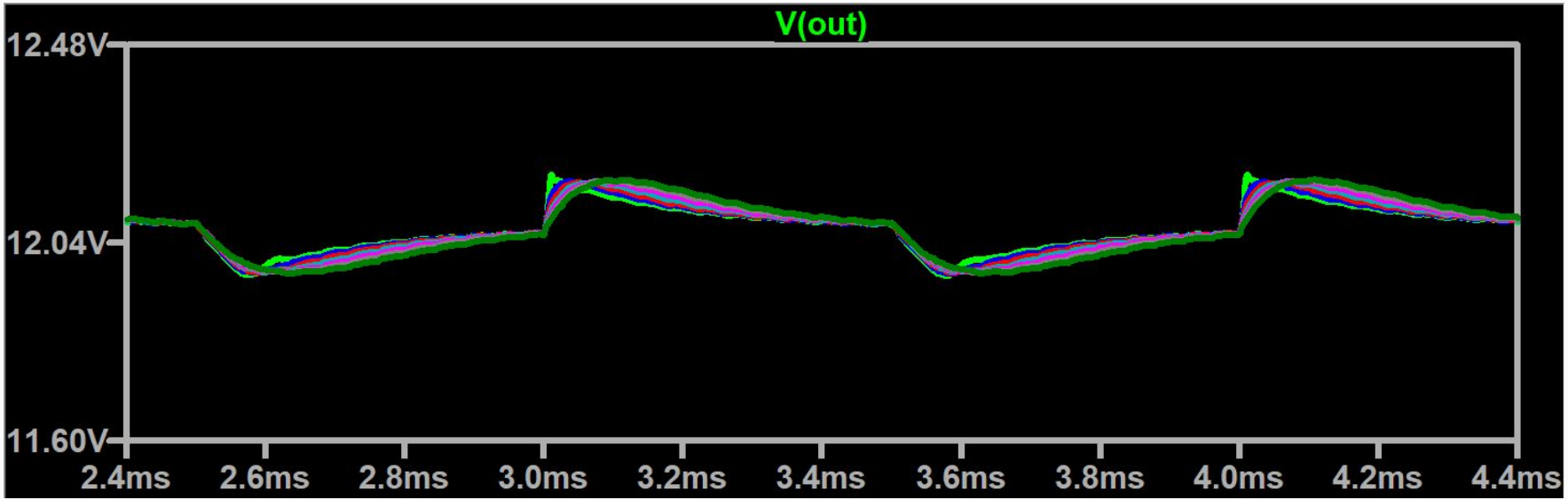

Load Regulation

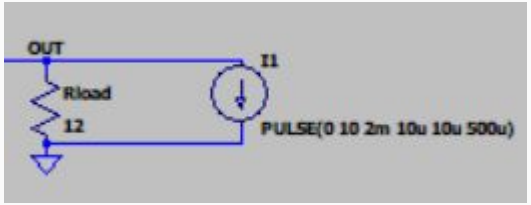

With a current pulse of 0 to 10 A, rise and fall of 10us.

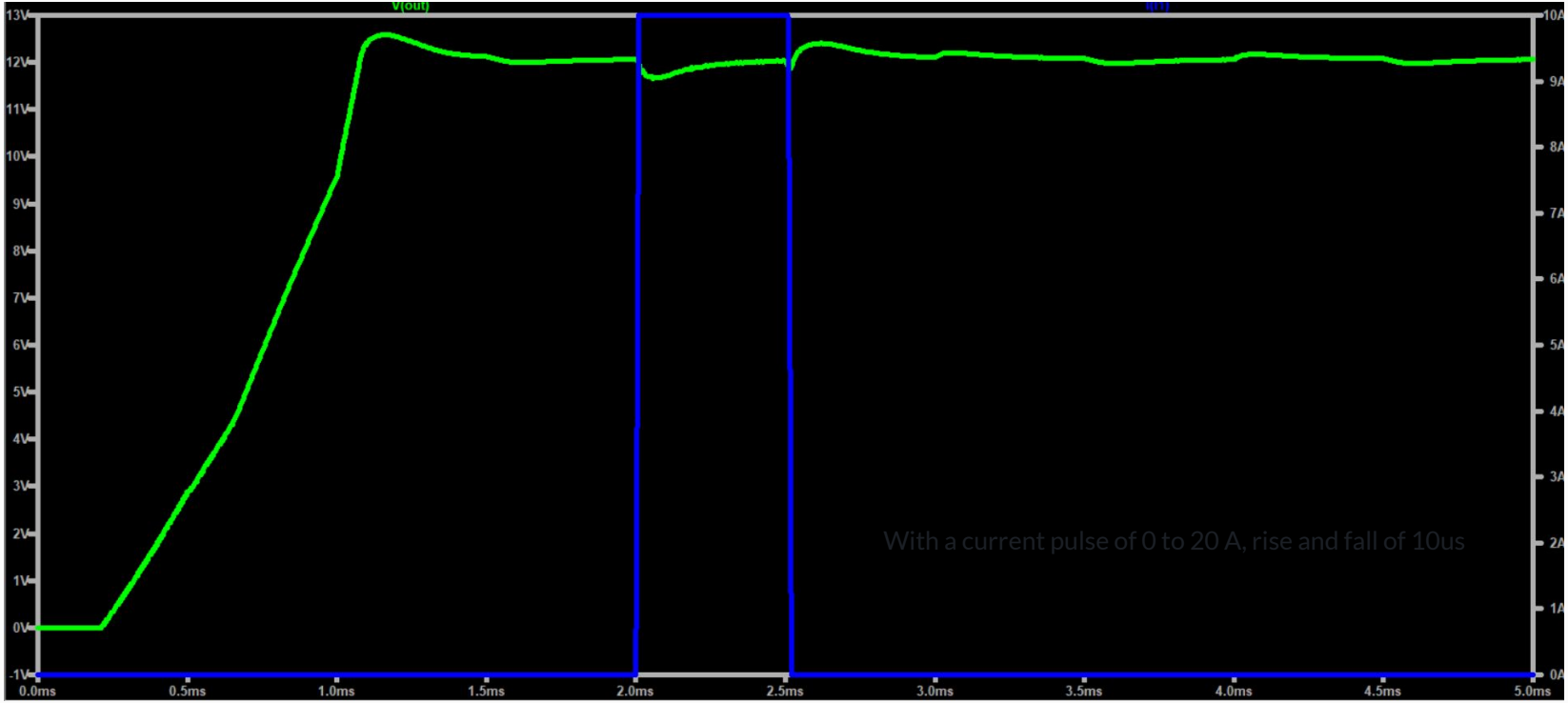

Load Regulation Analysis

- 0 to 10 A pulse (0.5 ms): Vout dips because the load jumps faster than the converter can ramp current, so Cout supplies the difference until the loop catches up.

- Return to 0 A: Vout overshoots because inductor energy + loop delay briefly over-deliver current, so Cout charges up before regulation backs off.

- Overall this behavior is expected and are normal load regulation effects from finite energy storage and finite control-loops.

Line Regulation

2-pulse input, 0-14V switching every .5ms, 0-8V switching every 1ms. 1us rise and fall time for both.

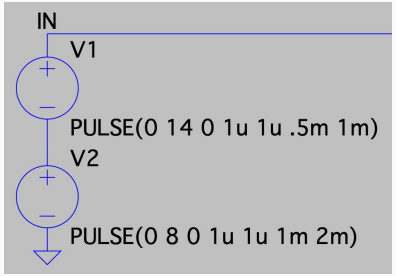

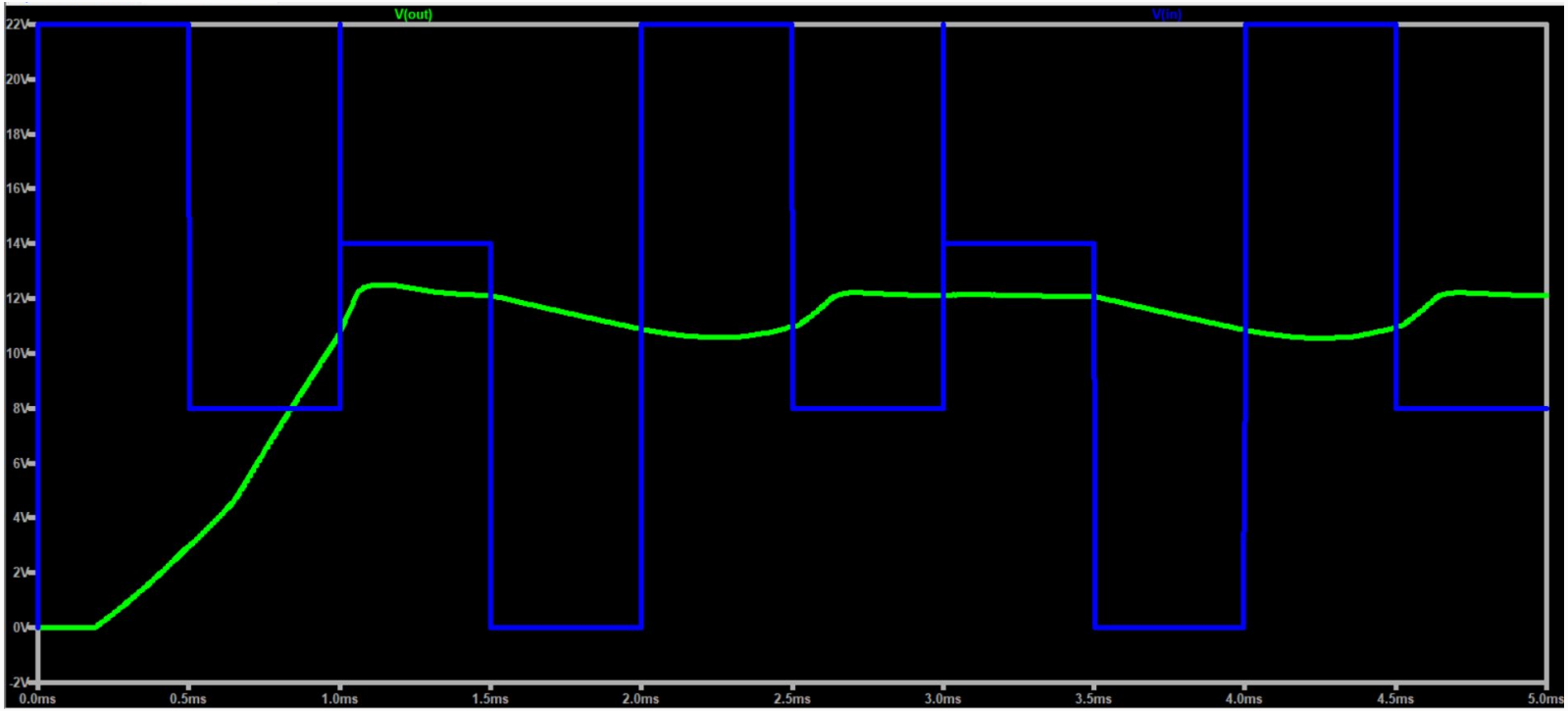

Line Regulation Analysis

- 0 to 22V (2-2.5 ms): Vout starts to change from slowly decreasing to increasing back toward 12V.
- 22V to 8V (2.5-3 ms): Vout bumps up more quickly and settles at 12V.
- 8V to 14V (3-3.5 ms): Vout stays roughly at 12V (good regulation).
- 14V to 0V (3.5-4 ms): Vout drops off as equivalent Cout discharges to try to maintain 12V at output while input is 0V.
- Overall despite intentionally disruptive Vin steps, Vout stays roughly regulated around 12V with predictable dipping and recovering behavior.

Board: LTC3862-2

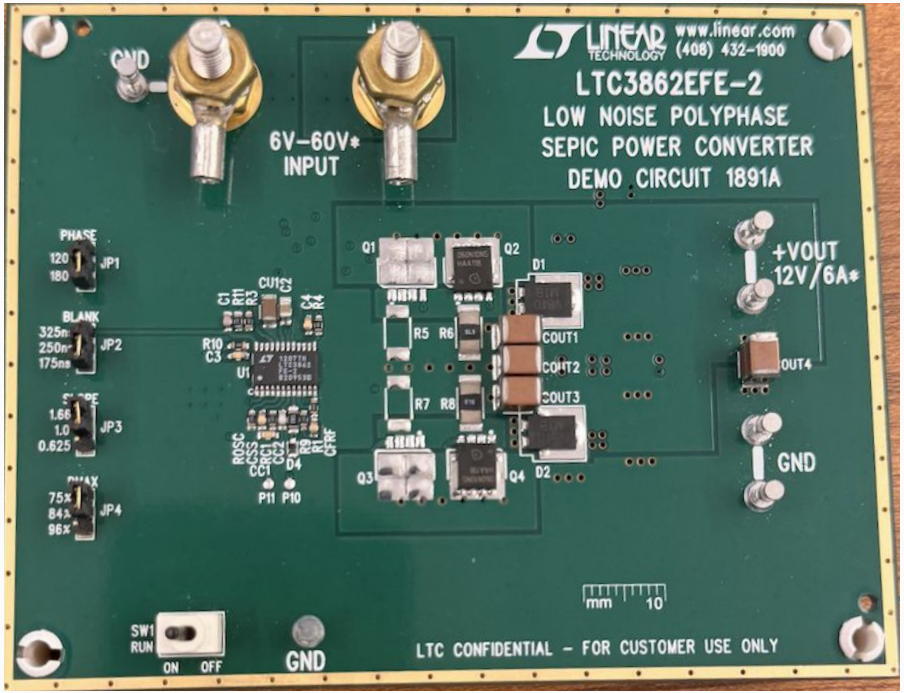

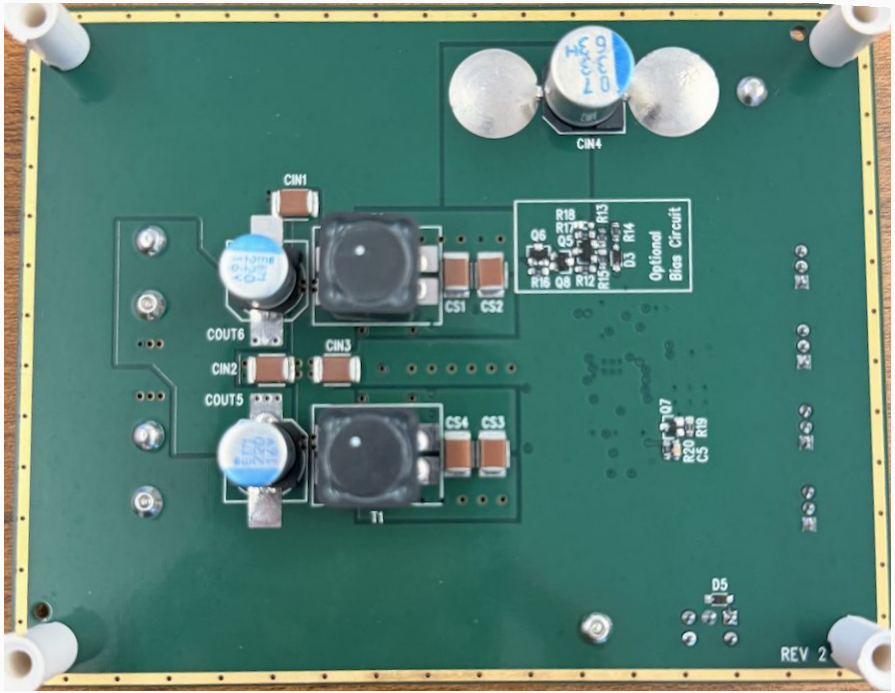

SEPIC Converter PCB - Hooked Up

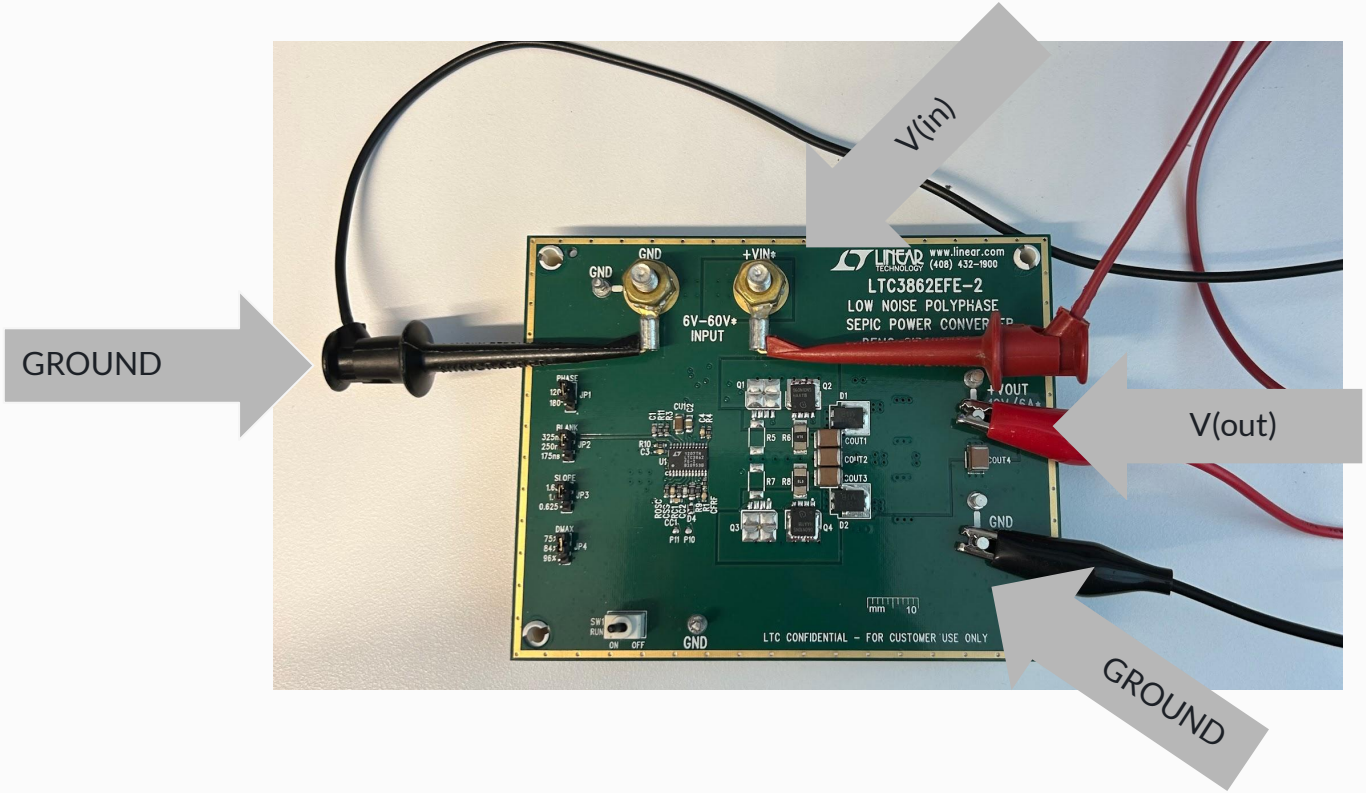

Pros & Cons

PROS:

- Step-up and step-down capability without polarity inversion.
- 2-phase (interleaving) reduces ripple current per phase, which leads to typically lower input/output ripple and potentially smaller filtering for the same power.
- External MOSFETs let you scale current/power and optimize efficiency.

CONS:

- More parts, more things to get wrong vs a normal buck, boost, or buck-boost.
- Increased design complexity and costs.
- Higher components leads to more heat, which results in more concern regarding thermal design.